HARBOURVIEW SEWER REDIRECTION

TOWN OF STRATFORD
PRINCE EDWARD ISLAND

DESIGN CONSULTANTS:

WSP Canada Inc.
195 MacEwen Road
Summerside, Prince Edward Island, C1N 5Y4 Canada
T 902-436-2669 F 902-436-8601 wsp.com

CLIENT:

Town of Stratford
PRINCE EDWARD ISLAND

CONTENTS

SHEET C01	PLAN & PROFILE - STA 0+000 TO STA 0+090
SHEET C02	DETAILS & NOTES

APRIL 2026

C:\ACCDOCS\ACCDOCS\WSP CANADA PROJECTS (AMER)\ATLANTIC T&D\PROJECT FILES\2025\CA0061168.3724 - HARBOURVIEW SANITARY SEWER REDIRECTION\PRODUCTION\CA0061168.3724 - WORKING.DWG C00 PRINTED: 11:47 AM 2026/04/09 BY: CAKK134272

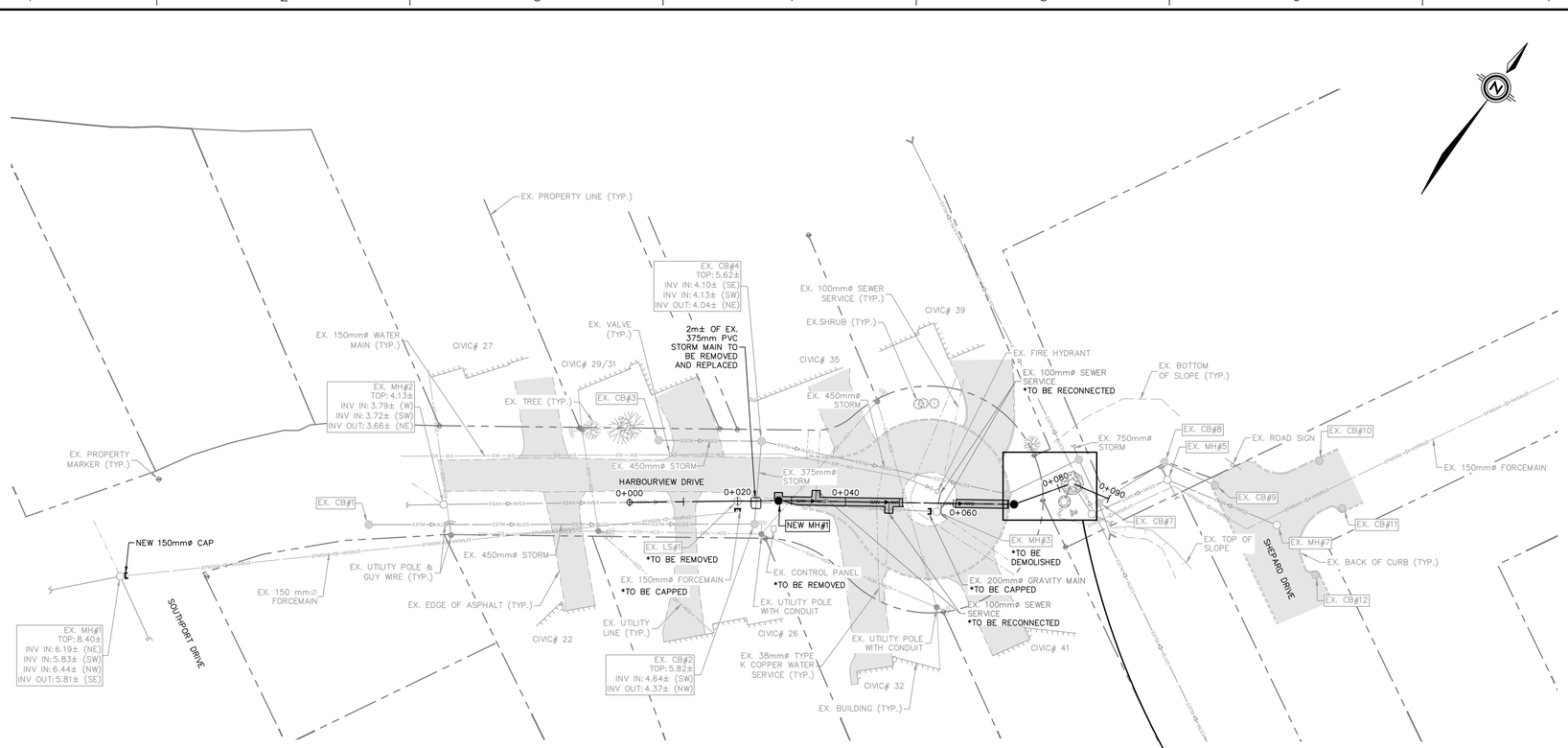

PLAN
1:500

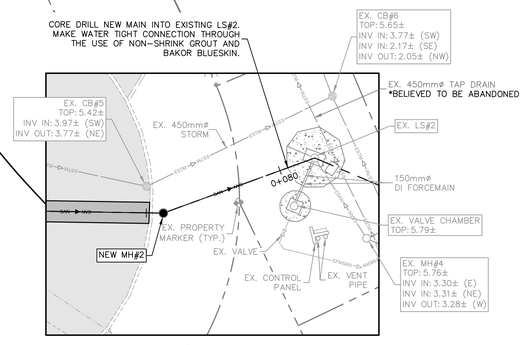

PLAN
1:100

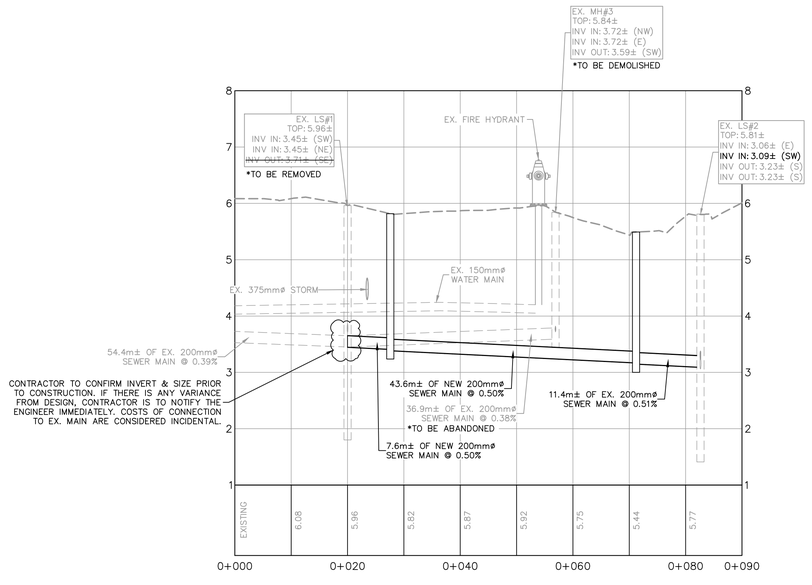

PROFILE
1:500H; 1:50V

RECOMMENDED CONSTRUCTION PROCEDURE:

1. MAKE CONNECTION TO LIFT STATION WITH NEW 200mmø PVC SEWER MAIN.
2. INSTALL NEW 200mmø PVC SEWER MAIN FROM LIFT STATION TO NEW MH#1. MAKE NECESSARY SEWER SERVICE RECONNECTIONS AS SERVICES ARE ENCOUNTERED.
3. INSTALL NEW MH#1.
4. EXCAVATE EX. 200mmø SEWER MAIN AND INSTALL TEMPORARY MANHOLE, CUT EXISTING 200mmø SEWER MAIN AFTER TEMPORARY MANHOLE IS IN PLACE.
5. BYPASS PUMP FROM EX. MH#2 TO NEW MH#1, AND FROM TEMPORARY MANHOLE TO NEW MH#1 WITH BYPASS IN PLACE, REMOVE EXISTING WET WELL FOR LIFT STATION ON HARBOURVIEW DRIVE.
6. CAP EXISTING 150mmø FORCE MAIN, ABANDONING IN PLACE.
7. CONNECT NEW 200mmø GRAVITY MAIN TO EX. 200mmø GRAVITY MAIN.

NOTES

1. SEE ALL DRAWINGS FOR ADDITIONAL NOTES AND DETAILS.
2. IF ANY ITEMS NOT SHOWN ON DRAWINGS ARE DISCOVERED DURING THE COURSE OF THE WORK, THE CONTRACTOR SHALL NOTIFY THE ENGINEER IMMEDIATELY.
3. MAINTAIN MINIMUM 1.8m COVER OVER ALL GRAVITY SEWER MAINS UNLESS OTHERWISE NOTED ON DRAWINGS. INSULATION (HI-40) IS REQUIRED ON ALL PIPE WORK WITH LESS THAN THE SPECIFIED COVER AND AS INDICATED ON THE APPROVED DRAWINGS. THE USE OF INSULATION WILL BE CONSIDERED INCIDENTAL TO THE INSTALLATION OF THE PIPE.
4. NO TRENCHES TO BE LEFT OPEN OVERNIGHT.
5. ALL EQUIPMENT TO BE INSTALLED IN ACCORDANCE WITH MANUFACTURER'S SPECIFICATIONS AND INSTRUCTIONS.
6. ALL NEW MANHOLES SHALL BE SUPPLIED WITH A MINIMUM OF 200mm AND MAXIMUM OF 450mm OF GRADE RINGS IN THE TOTAL DEPTH TO ALLOW FOR FINAL HEIGHT ADJUSTMENT IN THE FIELD.
7. ALL PIPEWORK IS TO BE BEDDED AND BACKFILLED WITH TYPE 4 (BEDDING SAND) MATERIAL TO 300mm ABOVE TOP OF PIPE. ALL BACKFILL IS TO BE COMPACTED TO 100% STANDARD PROCTOR DENSITY, TO THE ENGINEER'S APPROVAL.

LEGEND:

	EXISTING	PROPOSED
PROPERTY LINE		
FOUND SURVEY MONUMENT		
ASPHALT		
CURB		
SANITARY PIPE & MANHOLE		
SANITARY SERVICE		
WATER PIPE, HYDRANT & VALVE		
WATER SERVICE		
STORM PIPE & CATCH BASIN		
UTILITY LINES & POLE		
GUY WIRE		
TOP OF SLOPE		
BOTTOM OF SLOPE		
TREE		
TREE & VEGETATION LINE		
ROAD SIGN		
SPOT ELEVATION	×18.67	18.67

SEAL:

PROFESSIONAL ENGINEER — THE ASSOCIATION OF PROFESSIONAL ENGINEERS OF THE PROVINCE OF PRINCE EDWARD ISLAND — Christopher Jay — 588 — 2026-04-09 — DATE — PROVINCE OF PRINCE EDWARD ISLAND

DISCLAIMER: COPYRIGHT:
DRAWINGS SUBJECT TO APPROVAL PRIOR TO CONSTRUCTION. THIS DRAWING AND DESIGN IS COPYRIGHT PROTECTED WHICH SHALL NOT BE USED, REPRODUCED OR REVISED WITHOUT WRITTEN PERMISSION BY WSP CANADA INC. THE CONTRACTOR SHALL CHECK AND VERIFY ALL DIMENSIONS AND UTILITY LOCATIONS AND REPORT ALL ERRORS AND OMISSIONS PRIOR TO COMMENCING WORK.

REVISION:

NO.	DATE YYYY/MM/DD	DESCRIPTION
0	2026/04/09	ISSUED FOR TENDER

PROJECT NUMBER: CA0061168.3724	DATE: (YYYY/MM/DD) 2026/01/19
ORIGINAL SCALE: HORIZONTAL: 1:500 VERTICAL: 1:50	IF THIS BAR IS NOT 25mm LONG, ADJUST YOUR PLOTTING SCALE. 25mm
DESIGNED BY: COLIN MacEACHERN	REVIEWED BY: C. JAY
DRAWN BY: K. KAUR	

SCALE: 1:500 METRIC
10 8 6 4 2 0 10 20 30

WSP Canada Inc.
195 MacEwen Road
Summerside, Prince Edward Island, C1N 5Y4 Canada
T 902-436-2669 F 902-436-8601 wsp.com

CLIENT:

TOWN OF STRATFORD

CLIENT REF. #:

PROJECT:

HARBOURVIEW SEWER REDIRECTION
STRATFORD, PE

TITLE:

PLAN & PROFILE
STA 0+000 TO STA 0+090

SHEET NUMBER: C01

SHEET #: 1 OF 2

C:\ACCDOCS\MODOCS\WSP CANADA PROJECTS (AMER)\ATLANTIC T&I\PROJECT FILES\0025\CA0061168.3724 - HARBOURVIEW SANITARY SEWER REDIRECTION PRODUCTION\CA0061168.3724 - WORKING.DWG PRINTED: 11:47 AM 2026/04/09 BY: OAKLEA272

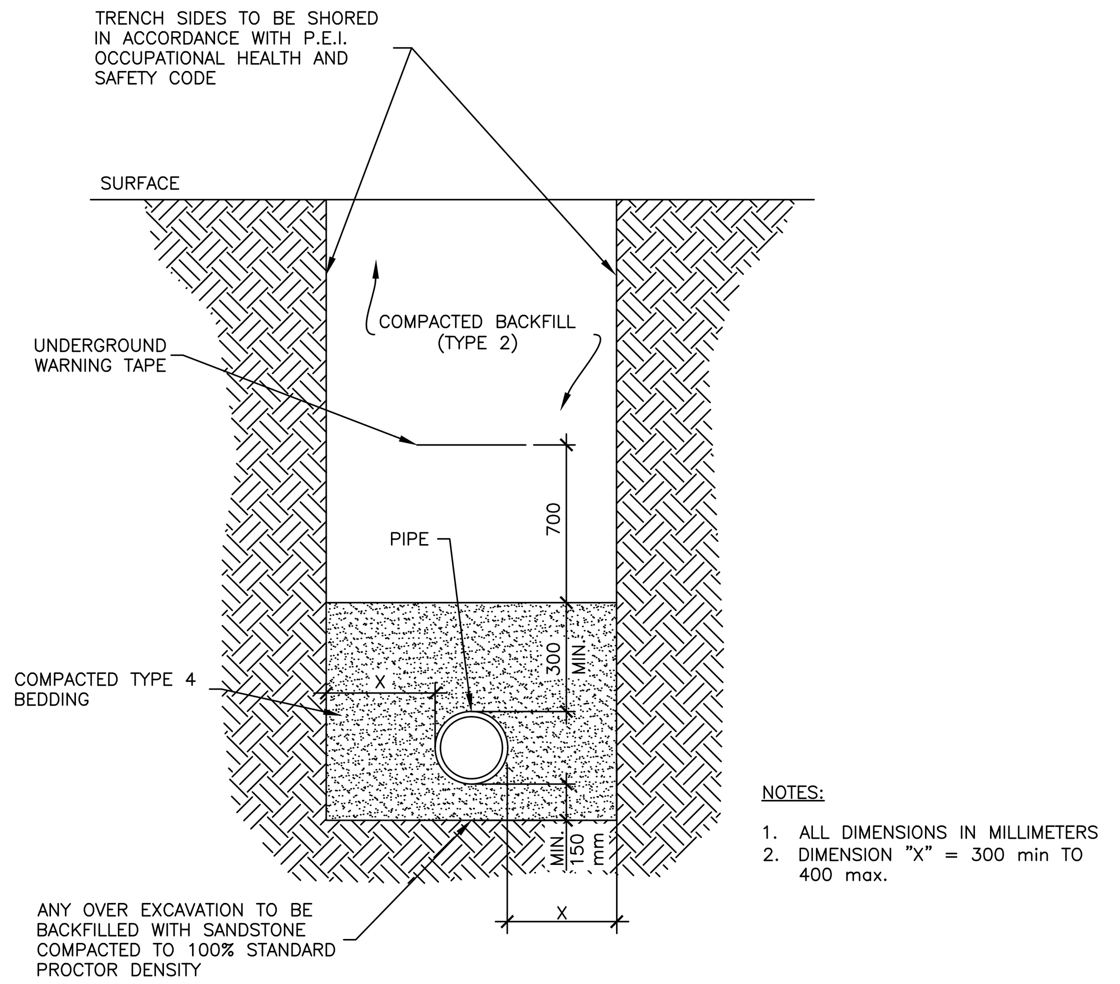

NOTES:

1. ALL DIMENSIONS IN MILLIMETERS
2. DIMENSION "X" = 300 min TO 400 max.

1 / C02 TYPICAL TRENCH DETAIL N.T.S

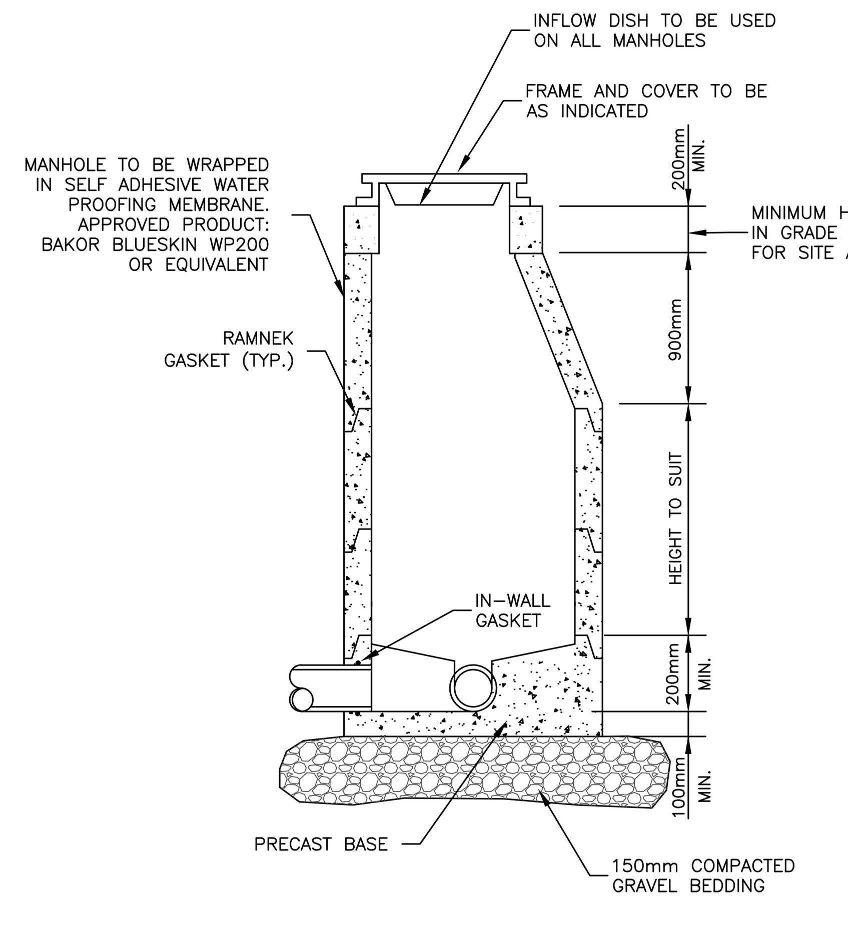

MANHOLE NOTES:

1. ALL MANHOLE FRAMES LOCATED IN ASPHALT ARE TO BE FLOATING FRAME IMP C56, OR APPROVED EQUAL.
2. ALL MANHOLE GRADE RINGS AND FRAMES ARE TO BE SEALED WITH SINGLE COMPONENT, HYDROPHOBIC, FLEXIBLE SEALANT/ADHESIVE, SUCH AS XSEAL BY FERNCO, OR APPROVED EQUAL. BUTYL RUBBER GASKET SUCH AS RAM-NEK WILL BE ACCEPTED WHEN INSTALLED IN INTERMEDIATE SECTIONS OF MANHOLE.
3. IN THE CASE OF A VACUUM TEST FAILURE, LEAKS ARE TO BE SEALED USING A HYDROPHOBIC POLYURETHANE GROUT SUCH AS HYPERFLEX BY FERNCO, OR APPROVED EQUAL. ONLY GROUTING OF SEAMS SHALL BE PERMITTED.
4. GRADE RINGS 75mm OR LARGER TO BE CONCRETE, GRADE RINGS LESS THAN 75mm MUST BE OF RECYCLED RUBBER. TOP OF STRUCTURE, INCLUDING GRADE RINGS AND COVER ARE TO BE LEVEL WITH THE FINISHED GRADE SLOPE. SLOPED RUBBER GRADE RINGS ARE TO BE USED WHERE REQUIRED TO ENSURE COVER SITS FLUSH WITH FINISHED GRADE.
5. UNDER NO CIRCUMSTANCES IS SURFACE GROUT PERMITTED FOR USE INTERNALLY OF STRUCTURE.
6. EXTERNAL PIPING IS TO BE SEALED WITH COMMON CEMENT SURFACE GROUT.
7. MANHOLES LOCATED IN REMOTE LOCATIONS ARE TO BE LOCKED AT THE DISCRETION OF THE UTILITY.

2 / C02 TYPICAL MANHOLE DETAIL N.T.S

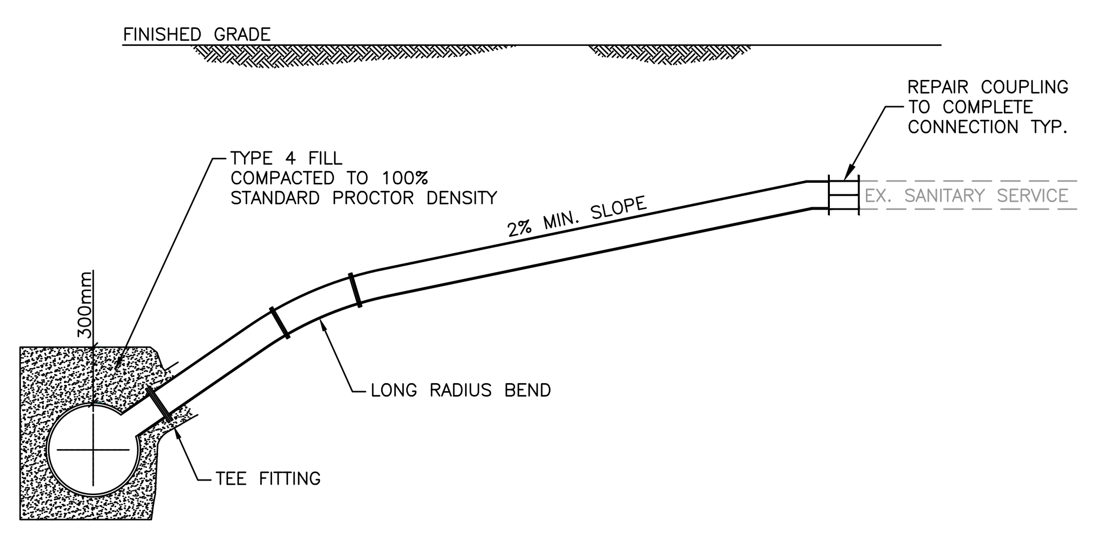

3 / C02 TYPICAL SANITARY SERVICE RECONNECTION N.T.S

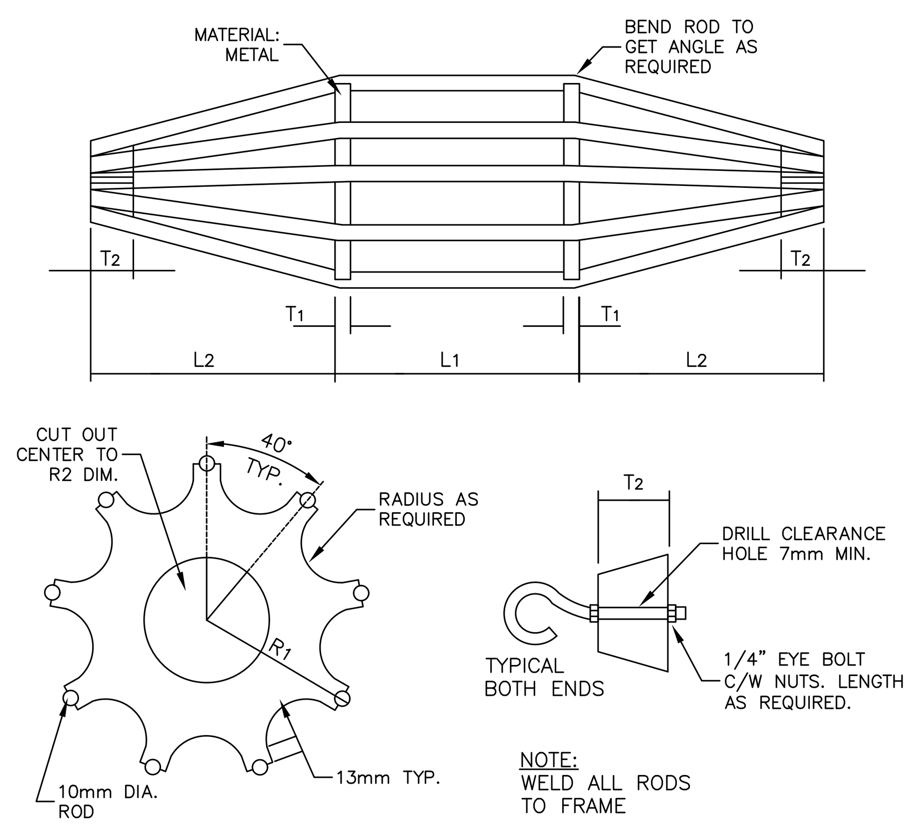

NOTE:
WELD ALL RODS TO FRAME

PIPE SIZE	BASE ID.	L1 L2	ROD DIA.	T1	T2	R2	5% R1	7 1/2% R1
150	148.66	150	10	10	25	20	70.6	68.8
200	199.46	150	10	10	25	35	94.7	92.2
250	249.20	200	10	10	25	40	118.4	115.3
300	296.78	200	10	10	25	45	141.0	137.3
375	363.10	230	10	10	25	50	172.5	167.9

4 / C02 TYPICAL MANDREL DETAIL N.T.S

EROSION CONTROL NOTES:

1. SEE ALL DRAWINGS FOR ADDITIONAL NOTES AND DETAILS.
2. THE CONTRACTOR IS REQUIRED TO FOLLOW THE ENVIRONMENTAL CONTROLS AS DETAILED IN THE P.E.I. DEPARTMENT OF TRANSPORTATION, INFRASTRUCTURE AND ENERGY "ENVIRONMENTAL PROTECTION PLAN" MANUAL. THE REQUIREMENTS OF THE EPP WILL BE STRICTLY ENFORCED AND ARE CONSIDERED INCIDENTAL TO THE PROJECT. NO EXTRAS WILL BE ALLOWED.
3. ALL WORKS TO BE PERFORMED IN ACCORDANCE WITH REQUIREMENTS OF REGIONAL ENVIRONMENTAL LAWS AND REGULATIONS.
4. ALL WORKS TO BE PERFORMED IN ACCORDANCE WITH REQUIREMENTS OF THE PRINCE EDWARD ISLAND DEPARTMENT OF ENVIRONMENT, ENERGY AND CLIMATE ACTION.
5. AT A MINIMUM THE FOLLOWING ENVIRONMENTAL CONTROLS ARE TO BE USED FOR AREAS DISTURBED ADJACENT TO DITCHES, WET LANDS AND STREAMS.
   5.1. STRAW CHECK DAMS
   5.2. HYDROSEEDING
   5.3. STRAW MULCH
   5.4. TYPE 1 SILT FENCE
6. PLACE ALL ENVIRONMENTAL CONTROLS PRIOR TO ANY EXCAVATION. REPLACE AS NECESSARY AS CONSTRUCTION PROCEEDS.
7. ALL DISTURBED AREAS ARE TO RECEIVE 100mm TOPSOIL AND SOD FOLLOWING SHAPING REQUIREMENTS, UNLESS NOTED OTHERWISE. CONTRACTOR TO ENSURE POSITIVE DRAINAGE IS ACHIEVED.
8. ALL AREAS DISTURBED DURING CONSTRUCTION (I.E. ASPHALT, GRASS, ETC.) ARE TO BE REINSTATED TO THE ORIGINAL CONDITION TO THE APPROVAL OF THE ENGINEER. ALL COSTS FOR REINSTATEMENT ARE TO BE INCLUDED IN THE PER UNIT COST OF PIPE INSTALLATION. NO EXTRA WILL BE ALLOWED.
9. THE CONTRACTOR SHALL PROVIDE ADEQUATE COMPACTION AND SHAPING TO PREVENT THE FORMATION OF TROUGHS DURING PERIODS OF HEAVY RAIN.
10. EROSION CONTROL MEASURES MUST BE CHECKED AND MAINTAINED ON A REGULAR BASIS (I.E. AT LEAST ONCE EVERY 7 DAYS OR IMMEDIATELY AFTER A HEAVY RAINFALL EVENT).
11. CONTRACTOR TO HAVE ADDITIONAL SILT FENCE, BALED HAY AND LOOSE HAY AND/OR MULCH ON SITE FOR MAINTENANCE AND INSTALLATION OF ADDITIONAL MEASURES AS REQUIRED.
12. ALL MEASURES SHALL BE TAKEN BY THE GENERAL CONTRACTOR TO MINIMIZE THE TRANSPORT OF SEDIMENT FROM THE CONSTRUCTION SITE.
13. ANY MUD OR DEBRIS THAT IS CARRIED OFFSITE AND ONTO THE PUBLIC ROADWAY MUST BE CLEANED OFF AT THE END OF EACH WORKDAY.
14. FAILURE TO COMPLY WITH THE EROSION AND SEDIMENTATION CONTROLS AS OUTLINED IN THE EROSION AND SEDIMENT CONTROL PLAN MAY RESULT IN A STOP WORK ORDER UNTIL ADEQUATE MEASURES HAVE BEEN TAKEN TO CORRECT THE ISSUE(S).
15. EROSION CONTROL MEASURES SHALL NOT BE REMOVED UNTIL THE SITE IS STABLE AND VEGETATION IS ESTABLISHED, UNLESS OTHERWISE DIRECTED BY THE ENGINEER.
16. A SPILL CONTAINMENT KIT SHALL BE ONSITE AT ALL TIMES WHILE HEAVY EQUIPMENT IS ONSITE.
17. ANY CONCERNS OR EMERGENCIES RELATED TO EROSION AND SEDIMENTATION FROM THE SITE SHALL BE DIRECTED TO THE ENGINEER.

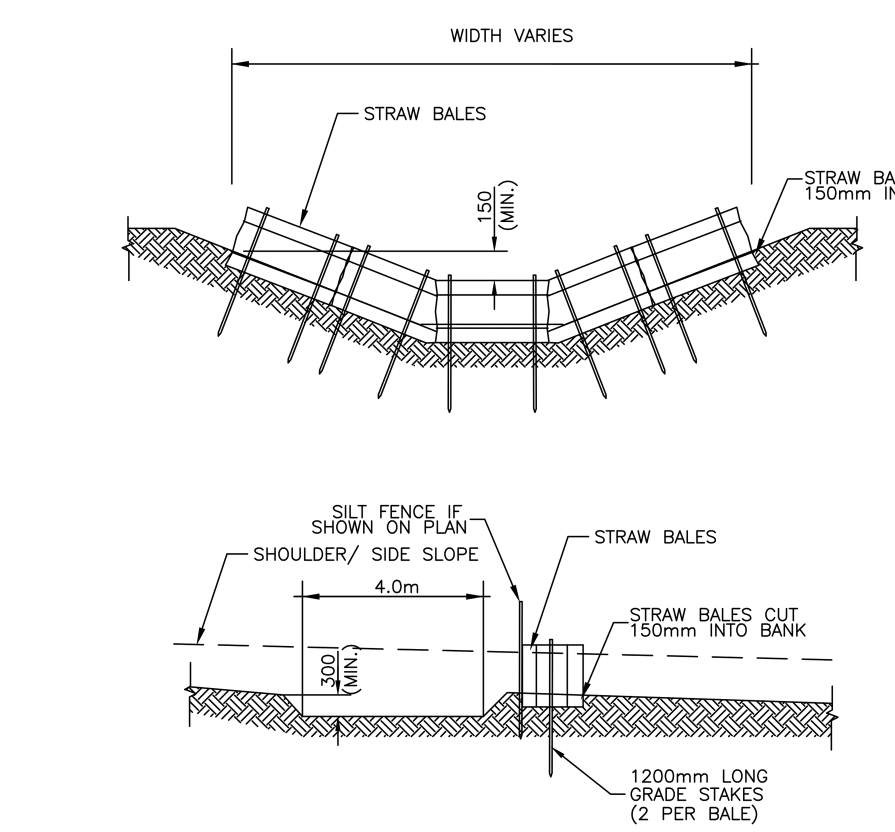

5 / C02 TYPICAL STRAW BALE CHECK DAM DETAILS N.T.S

NOTES

1. BIDDERS ARE ADVISED THAT ANY PUMPING WILL BE SUBJECT TO ALL ENVIRONMENTAL AGENCY REGULATIONS AND MUST BE ADDRESSED IN THE PROJECT EPP. A CONTAINED AREA TO RECEIVE PUMPING DISCHARGE WILL BE THE CONTRACTORS RESPONSIBILITY WITH RESPECT TO LOCATION, TYPE, APPROVAL AND MAINTENANCE. NO EXTRA WILL BE ALLOWED FOR ANY COST ASSOCIATED WITH THIS ITEM.
2. ANY REPAIR TO EXISTING INFRASTRUCTURE DAMAGED DURING CONSTRUCTION SHALL BE AT THE EXPENSE OF THE CONTRACTOR.
3. CONTRACTOR MAY NOT SUBSTITUTE ANY MATERIALS OR EQUIPMENT UNLESS WRITTEN APPROVAL IS RECEIVED FROM THE ENGINEER.
4. THE CONTRACTOR IS REQUIRED TO CARRY OUT AN EXTENSIVE EXPLORATION PROGRAM PRIOR TO BEGINNING CONSTRUCTION. THE CONTRACTOR IS REQUIRED TO LOCATE ALL SUBSURFACE PIPES, ELECTRICAL LINES AND COMMUNICATION LINES AND DETERMINE EXACT ELEVATIONS AND LOCATIONS OF THE ABOVE LINES RELATIVE TO THE NEW MAIN BEING INSTALLED. NOTIFY ENGINEERS IF A CONFLICT IS IDENTIFIED TO MAKE THE REQUIRED ADJUSTMENTS. CONFIRM NO CONFLICTS EXISTS PRIOR TO PLACING ANY NEW SUBSURFACE PIPES. NO ADDITIONAL MONIES SHALL BE PAID TO THE CONTRACTOR AS A RESULT OF THIS REQUIREMENT.
5. NO SEWER MAINS ARE TO BE BACKFILLED WITHOUT THE ENGINEERS INSPECTION AND APPROVAL.
6. SEWER LINE MARKING TAPE IS REQUIRED FOR ALL NEW FORCEMAIN AND GRAVITY MAIN AND IS CONSIDERED INCIDENTAL TO THE PROJECT.
7. INTENTIONAL BREAKING OF EXISTING WATER AND SEWER SERVICES TO FACILITATE PLACEMENT OF THE NEW GRAVITY MAIN WILL NOT BE PERMITTED. THE CONTRACTOR IS TO EXCAVATE IN ADVANCE OF MAIN PLACEMENT TO LOCATE THE SERVICES. WHERE SERVICES ARE DAMAGED THEY ARE TO BE REPAIRED AT THE CONTRACTOR'S EXPENSE.
8. ALL SANITARY GRAVITY MAIN TO BE PVC DR35.
9. EXISTING UTILITY INFORMATION HAS BEEN OBTAINED AND SCALED IN PART FROM RECORD DRAWINGS RECEIVED FROM THE TOWN OF STRATFORD. ALL INFORMATION GIVEN ON DRAWINGS IS TO BE CONSIDERED APPROXIMATE ONLY, AND NOT TO BE CONSTRUED AS TOTALLY COMPLETE. PRIOR TO ANY CONSTRUCTION ACTIVITY, IT IS THE CONTRACTOR'S RESPONSIBILITY TO CONFIRM ALL REQUIRED INFORMATION REGARDING EXISTING CONDITIONS. (I.E. TELEPHONE, ELECTRIC, CABLE, UNDER ROADWAY DRAINAGE, DISTRICT HEATING, ETC.)
10. ALL DISTURBED PAINTED LINES (I.E. CENTERLINE, CROSSWALKS, PARKING, ETC.) ARE TO BE REINSTATED UPON COMPLETION. ALL COSTS ASSOCIATED WITH THIS WORK ARE TO BE CONSIDERED INCIDENTAL TO THE PROJECT. NO EXTRA WILL BE ALLOWED.
11. ALL PIPEWORK TO BE TESTED FOR LEAKS.
12. CONTRACTOR TO NOTIFY THE ENGINEER REGARDING CONSTRUCTION SCHEDULE PRIOR TO COMMENCING CONSTRUCTION.
13. THE CONTRACTOR IS REQUIRED TO FOLLOW THE ENVIRONMENTAL CONTROLS AS DETAILED IN THE P.E.I. DEPARTMENT OF TRANSPORTATION AND INFRASTRUCTURE. "ENVIRONMENTAL PROTECTION PLAN" MANUAL. THE REQUIREMENTS OF THE EPP WILL BE STRICTLY ENFORCED AND ARE CONSIDERED INCIDENTAL TO THE PROJECT. NO EXTRAS WILL BE ALLOWED. THE CONTRACTOR WILL BE REQUIRED TO INSTALL CHECK DAMS AND SILT FENCING AS REQUIRED DUE TO SITE CONDITIONS.
14. THE CONTRACTOR SHALL CHECK ALL DIMENSIONS AND ELEVATIONS ON SITE AND REPORT TO THE ENGINEER ANY DISCREPANCIES OR OMISSIONS PRIOR TO CONSTRUCTION.
15. ALL AREAS DISTURBED DURING CONSTRUCTION (I.E. ASPHALT, CONCRETE, GRASS, PAINT LINES, ETC.) ARE TO BE REINSTATED TO THE ORIGINAL CONDITION TO THE APPROVAL OF THE ENGINEER. ALL COSTS FOR REINSTATEMENT ARE TO BE CONSIDERED INCIDENTAL TO ITEM BEING INSTALLED. NO EXTRA WILL BE ALLOWED.
16. APPROVAL IS REQUIRED PRIOR TO STARTING ANY WORK ON PRIVATE PROPERTY. CONTRACTOR TO PROVIDE A MINIMUM OF 7 DAYS NOTICE TO PROPERTY OWNERS PRIOR TO STARTING ANY CONSTRUCTION THAT MAY AFFECT ACCESS TO PRIVATE PROPERTY. THIS INCLUDES BUT IS NOT LIMITED TO ACCESS TO DRIVEWAYS AND WALKWAYS.
17. ALL ASPHALT TO BE SUPPLIED AND PLACED AS PER SECTION 603 (HOT MIX ASPHALTIC CONCRETE) OF THE PEI TIE GENERAL SPECIFICATIONS, LATEST VERSION.
18. CONTRACTOR TO ADJUST ELEVATIONS OF EXISTING INFRASTRUCTURE INCLUDING BUT NOT LIMITED TO WATER VALVES, MANHOLES AND CHAMBER TOPS TO MATCH FINISH GRADE. NO EXTRAS WILL BE ALLOWED.
19. PRIOR TO PLACEMENT OF NEW ASPHALT A FRESH SAW CUT MUST BE PERFORMED IF ORIGINAL SAW CUT IS DAMAGED IN THE OPINION OF THE ENGINEER OR THE OWNER.
20. IT IS THE RESPONSIBILITY OF THE CONTRACTOR TO BECOME FAMILIAR WITH AND UNDERSTAND THE NATURE AND EXTENT OF THE WORK TO BE EXECUTED, THE NATURE OF THE SOIL, SURFACE WATER DRAINAGE, THE GENERAL FORM OF THE SURFACE OF THE GROUND AND GENERALLY OF ALL MATTERS WHICH CAN IN ANYWAY INFLUENCE THE TENDER.
21. CONTRACTOR TO PROVIDE TRAFFIC CONTROL PLANS TO OWNER'S REPRESENTATIVE FOR APPROVAL PRIOR TO CONSTRUCTION. THIS IS INCIDENTAL TO THE WORK, NO EXTRAS WILL BE ALLOWED.
22. THE CONTRACTOR SHALL BE RESPONSIBLE FOR ALL THE REMOVAL AND DISPOSAL OF ALL ITEMS REQUIRED TO COMPLETE THE WORK UNLESS DIRECTED OTHERWISE. THIS WORK IS CONSIDERED INCIDENTAL TO THE PROJECT, NO EXTRAS WILL BE ALLOWED.

NOTES

23. THE CONTRACTOR WILL NOT BE PERMITTED TO REMOVE ANY EXISTING TREES LOCATED WITHIN THE CONSTRUCTION ZONE UNLESS PROVIDED WRITTEN AUTHORIZATION BY THE OWNER AND THE TOWN OF STRATFORD.
24. DRIVEWAY REPAIRS ARE TO BE CONSTRUCTED AS PER TYPICAL DRIVEWAY REPAIR DETAILS BASED ON MATERIAL OF DRIVEWAY.
25. CONTROLS, EQUIPMENT, INSTRUMENTS AND HARDWARE REMOVED FROM LIFT STATION FOR DECOMMISSIONING OR UPGRADE SHALL BE TURNED OVER TO THE UTILITY IN UNDAMAGED CONDITION. COORDINATE DECOMMISSIONING AND TURNOVER WITH UTILITY.
26. ANY MINOR GRADE CHANGES AS A RESULT OF EXPLORATORY EXCAVATIONS WILL BE CONSIDERED INCIDENTAL TO THE WORK. NO EXTRAS WILL BE ALLOWED.
27. THE LIMIT OF TRENCH EXCAVATION IS BASED ON A THEORETICAL TRENCH WIDTH OF 1.5m. THE CONTRACTOR IS RESPONSIBLE FOR CONSIDERING ALL FACTORS (IE. EQUIPMENT, LABOUR, TECHNIQUE, DEPTH, ETC.) THAT WILL AFFECT THE ACTUAL WIDTH OF CUT AND SUBMIT A UNIT PRICE ACCORDINGLY. THEREFORE THE UNIT PRICE SUBMITTED MUST REFLECT ALL ASSOCIATED COSTS FOR THE EXCAVATION AND REINSTATEMENT OF THE ANTICIPATED TRENCH.
28. ALL STORM INFRASTRUCTURE WHICH IS IDENTIFIED AS "REMOVED AND REPLACED" IS TO BE INSTALLED WITH POSITIVE GRADE TO ELIMINATE ANY PONDING. ALL NEW STORM PIPING TO BE HDPE DUAL WALL.

LEGEND:

	EXISTING	PROPOSED
PROPERTY LINE		
FOUND SURVEY MONUMENT		
ASPHALT		
CURB		
SANITARY PIPE & MANHOLE	ESAN	SAN
SANITARY SERVICE		
WATER PIPE, HYDRANT & VALVE	EW	
WATER SERVICE		
STORM PIPE & CATCH BASIN	ESTM	
UTILITY LINES & POLE	EOH	
GUY WIRE		
TOP OF SLOPE		
BOTTOM OF SLOPE		
TREE		
TREE & VEGETATION LINE		
ROAD SIGN		
SPOT ELEVATION	×18.67	18.67

SEAL:

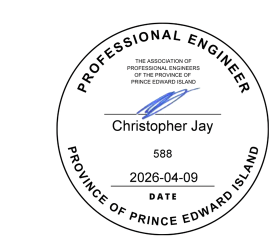

NOTE:
ALL ASPHALT TO BE SUPPLIED AND PLACED AS PER SECTION 603 (HOT MIX ASPHALTIC CONCRETE) OF DEPARTMENT OF TRANSPORTATION INFRASTRUCTURE AND ENERGY GENERAL SPECIFICATIONS, LATEST VERSION.

ASPHALT SEAL FOR TRENCH REPAIR TO BE PLACED WITH AN ASPHALT SPREADER WHERE POSSIBLE.

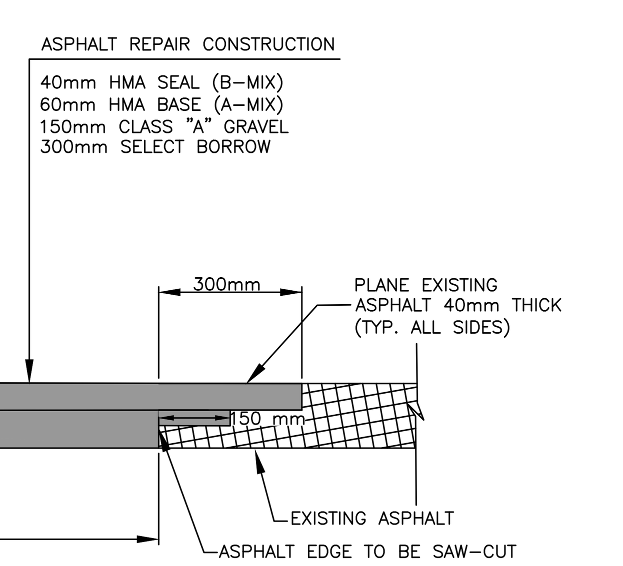

6 / C02 TYPICAL LOCAL ROAD REINSTATEMENT DETAIL N.T.S

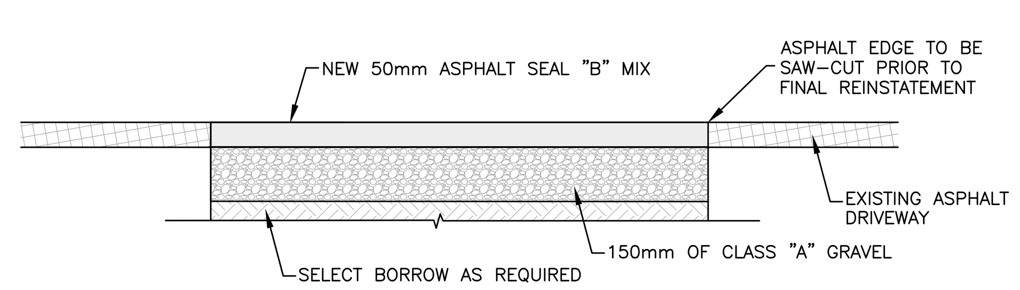

7 / C02 TYPICAL ASPHALT DRIVEWAY REPAIR DETAIL N.T.S

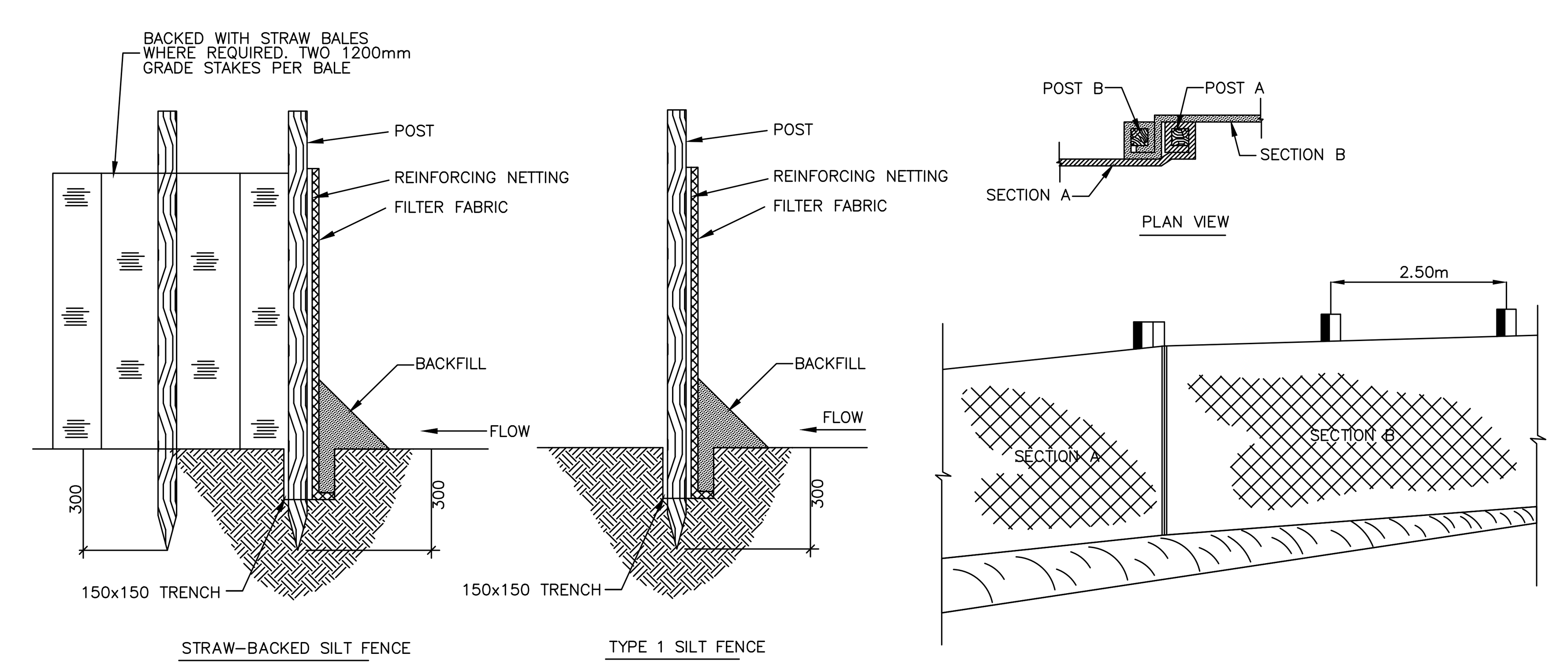

8 / C02 TYPICAL SILT FENCE DETAILS N.T.S

DISCLAIMER: COPYRIGHT:
DRAWINGS SUBJECT TO APPROVAL PRIOR TO CONSTRUCTION. THIS DRAWING AND DESIGN IS COPYRIGHT PROTECTED WHICH SHALL NOT BE USED, REPRODUCED OR REVISED WITHOUT WRITTEN PERMISSION BY WSP CANADA INC. THE CONTRACTOR SHALL CHECK AND VERIFY ALL DIMENSIONS AND UTILITY LOCATIONS AND REPORT ALL ERRORS AND OMISSIONS PRIOR TO COMMENCING WORK.

REVISION:

NO.	DATE YYYY/MM/DD	DESCRIPTION
0	2026/04/09	ISSUED FOR TENDER

PROJECT NUMBER: CA0061168.3724
DATE: (YYYY/MM/DD) 2026/01/19
ORIGINAL SCALE: HORIZONTAL: N/A VERTICAL: N/A
IF THIS BAR IS NOT 25mm LONG, ADJUST YOUR PLOTTING SCALE. 25mm
DESIGNED BY: COLIN MacEACHERN
REVIEWED BY: C. JAY
DRAWN BY: K. KAUR

SCALE: 1:500 METRIC 10 8 6 4 2 0 10 20 30

WSP Canada Inc.
195 MacEwen Road
Summerside, Prince Edward Island, C1N 5Y4 Canada
T 902-436-2669 F 902-436-8601 wsp.com

CLIENT: TOWN OF STRATFORD

CLIENT REF. #:

PROJECT: HARBOURVIEW SEWER REDIRECTION
STRATFORD, PE

TITLE: DETAILS & NOTES

SHEET NUMBER: C02

SHEET #: 2 OF 2

C:\ACCDOCS\ACCDOCS\WSP CANADA PROJECTS (AMER)\ATLANTIC T&I\PROJECT FILES\2025\CA0061168.3724 - HARBOURVIEW SANITARY SEWER REDIRECTION\PRODUCTION\CA0061168.3724 - WORKING.DWG C02 PRINTED: 11:47 AM 2026/04/09 BY: CAKK134272